GLIDE21

FRAMELESS
SLEEK
SECURE

GLIDE21 SLIDING DOOR

Discover the GLIDE21. With fully concealed outer frames, a hidden sash and an ultra-slim 21mm interlock, this inline slider creates a striking frameless aesthetic that floods interiors with natural light. Offering premium design and outstanding performance at a trade-ready price point.

PRODUCT FEATURES

- 21mm Interlock
- Flush threshold
- Fully concealed outerframe and hidden sash
- U values of 1.3W/m2K Double glazed
- Sash Width up to 3m x 3m
- Wrap around glazing system

OPTIONS

- Available in a range of single and dual colours, textures and finishes
- Available in both fixed and sliding configurations
- Reinforced Interlock options
- Fixed or adjustable rollers

SPECIFICATIONS

PERFORMANCE & FEATURES	
Air permeability	Class 4 (600 Pa)
Water tightness	Class 9A (600 Pa)
Wind Resistance	Class B5 (2000 Pa)
U-value (double glazing)	1.3 W/m²K
Maximum Sash Height (WxH)	3000mm x 3000 mm
Max Sash Weight	450kg
Maximum Glazing Thickness	32mm
System Depth	146mm dual track, 216mm triple track
Interlock Sightline	21mm
Frame Threshold Height	46.5mm
Frame height	81mm
Meeting Style Profile	100mm

SYSTEM CROSS SECTIONS

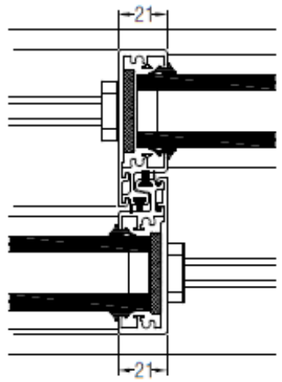

- Standard Interlock 21mm

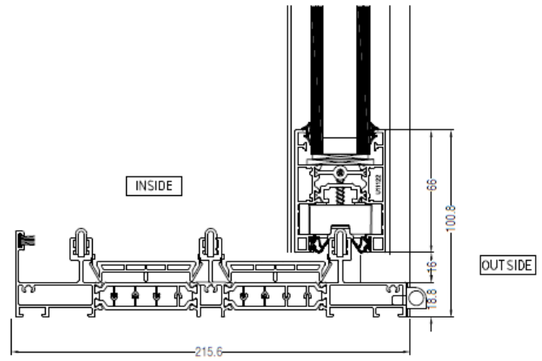

- Triple Track Frame Threshold

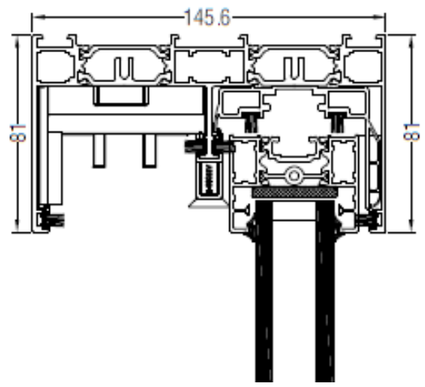

- Dual Track Head

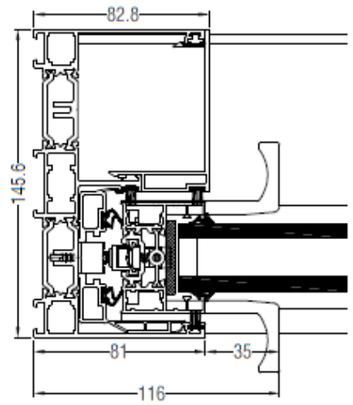

- Dual Track Sliding Panel Jamb